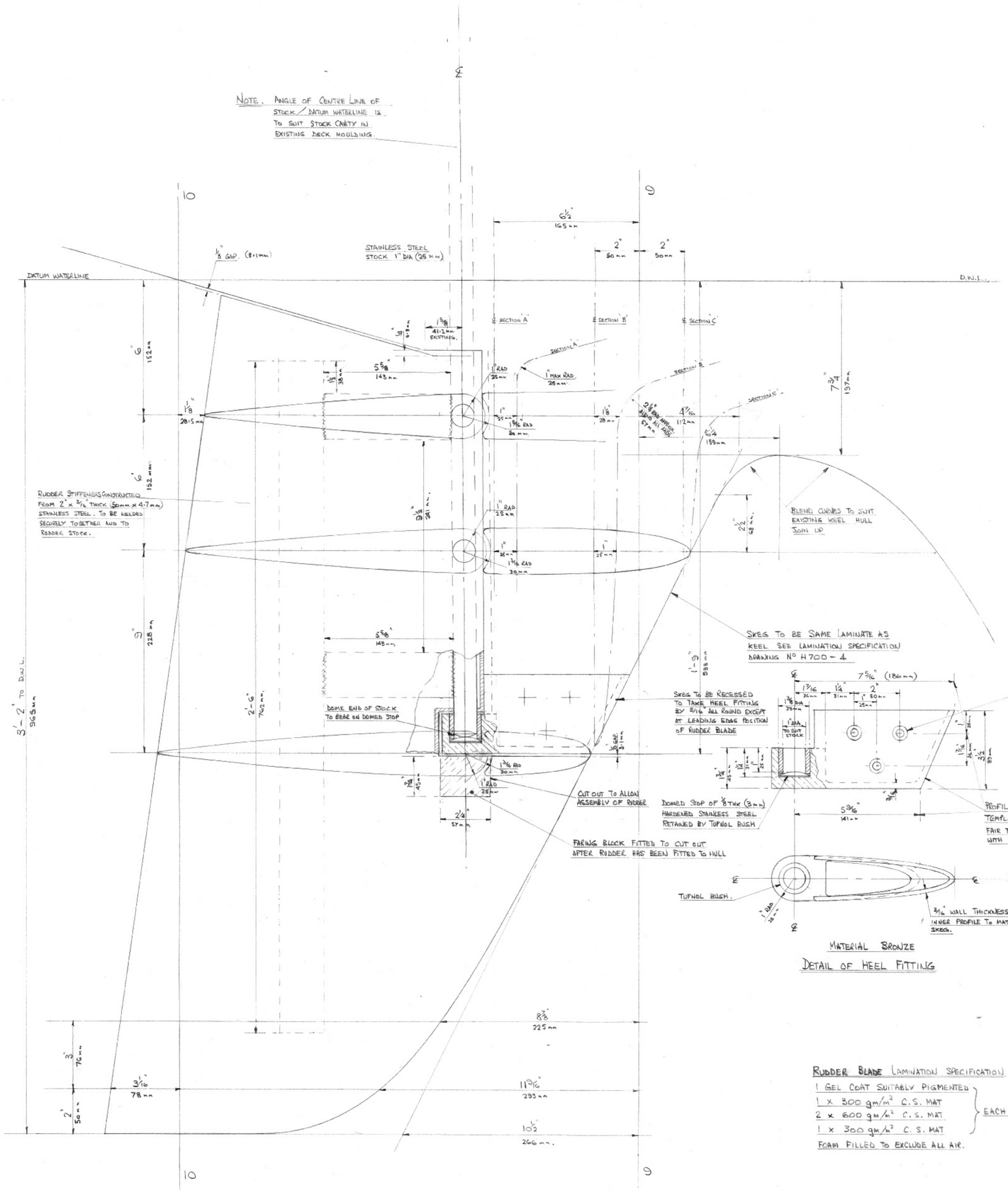

SCALE 1/2 FULL SIZE

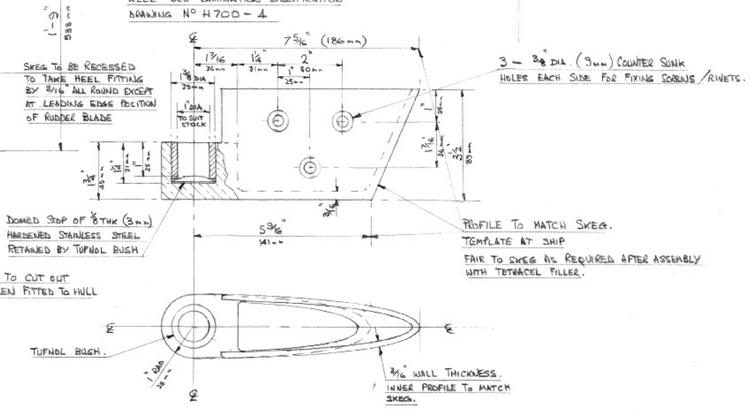

MATERIAL BRONZE

DETAIL OF HEEL FITTING

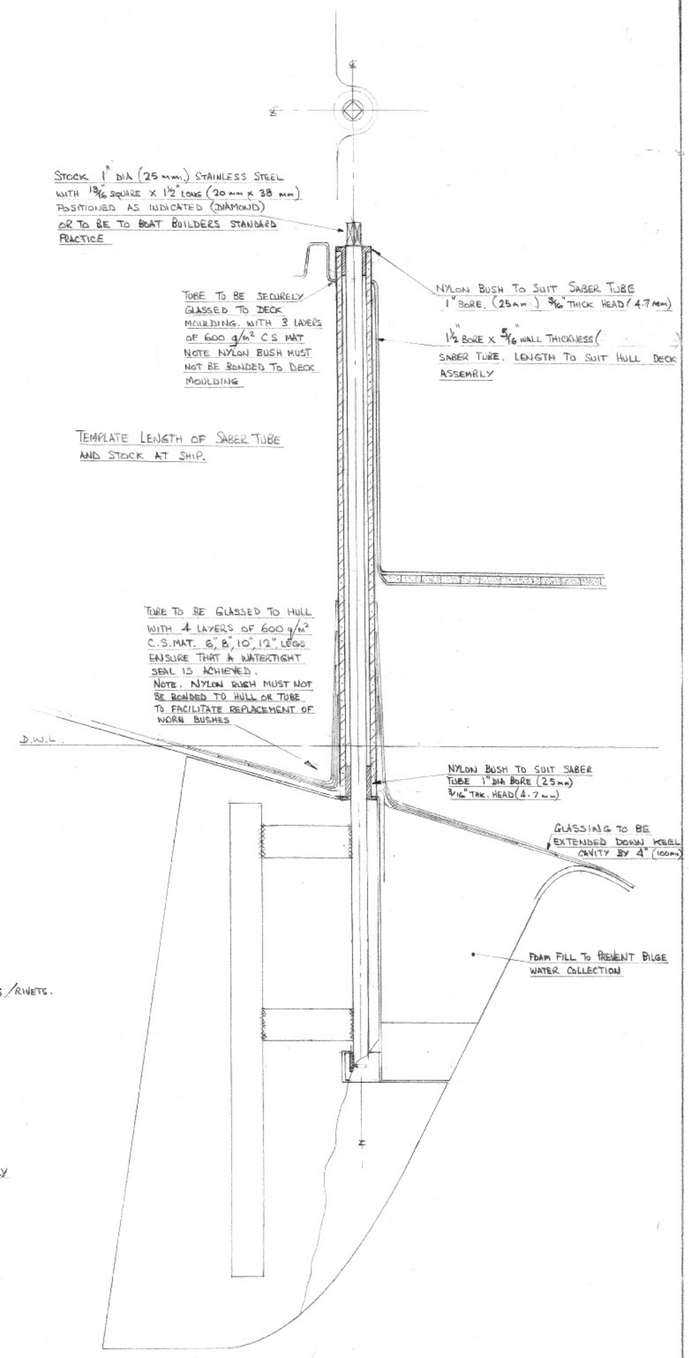

RUDDER STOCK DETAIL

SCALE 1/4 FULL SIZE

RUDDER BLADE LAMINATION SPECIFICATION

1 GEL COAT SUITABLY PIGMENTED	EACH SIDE
1 x 300 gm/m² C.S. MAT	
2 x 600 gm/m² C.S. MAT	
1 x 300 gm/m² C.S. MAT	

FOAM FILLED TO EXCLUDE ALL AIR.

HURLEY 700 CRUISER	RUDDER DETAIL

IAN L ANDERSON M.R.I.N.A.
NAVAL ARCHITECTS
SAIL · POWER · COMMERCIAL
7 Hauley Road Dartmouth
Devon England 08043 2137

COPYRIGHT
This design is the property of Ian L. Anderson M.R.I.N.A. and must be regarded as strictly confidential, it is not to be copied, issued to a Third Party or used for production purposes without this designers permission.

SCALE:	DATE:	DRAWN:	DRG'No:
1/2 & 1/4 FULL SIZE	26 FEB 81	R.A. MEAD	H 700 - 3.