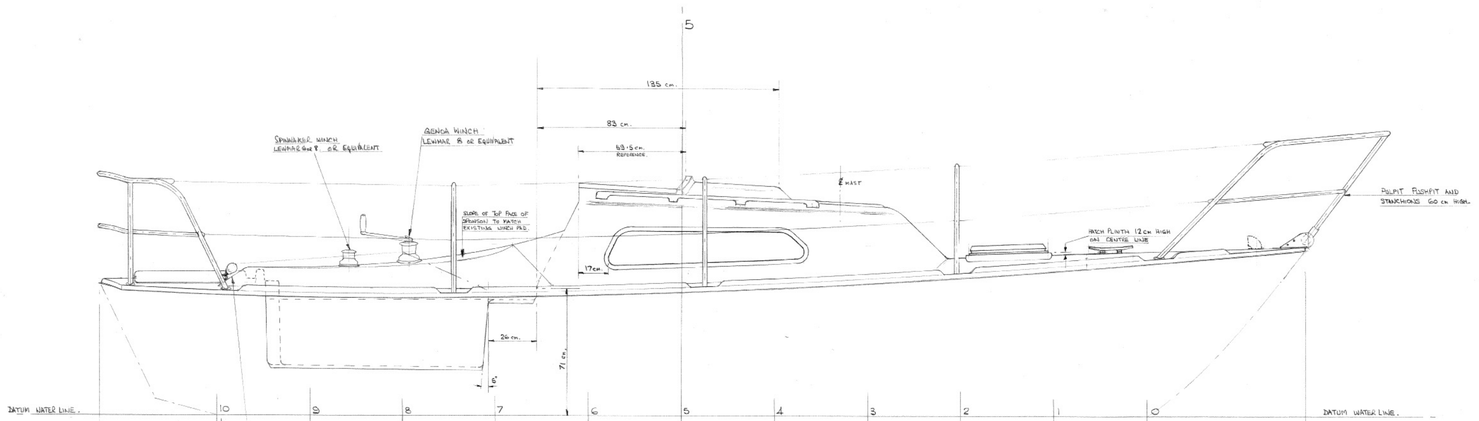

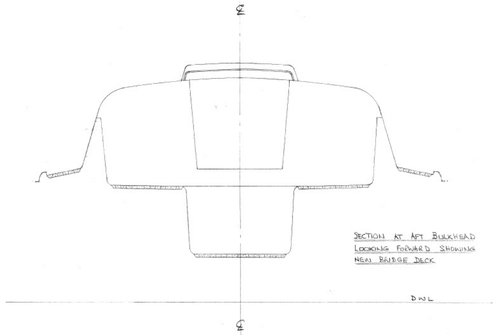

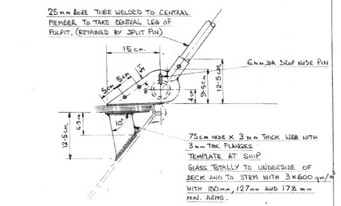

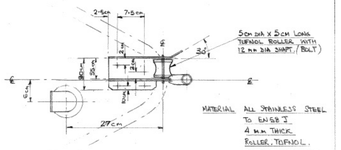

MATERIAL ALL STAINLESS STEEL TO EN58 J.
4 mm THICK.
ROLLER, TOPFIOL.
SHAFT 12 mm DIA S.S.
BOLT + NUT.

NOTE ALL WELDED JOINTS TO BE SOCIALLY AND TOTALLY WELDED AND POLISHED AFTER WELDING.
FINISH. POLISHED TOTALLY

DETAIL OF STEM HEAD FITTING SCALE 1:5

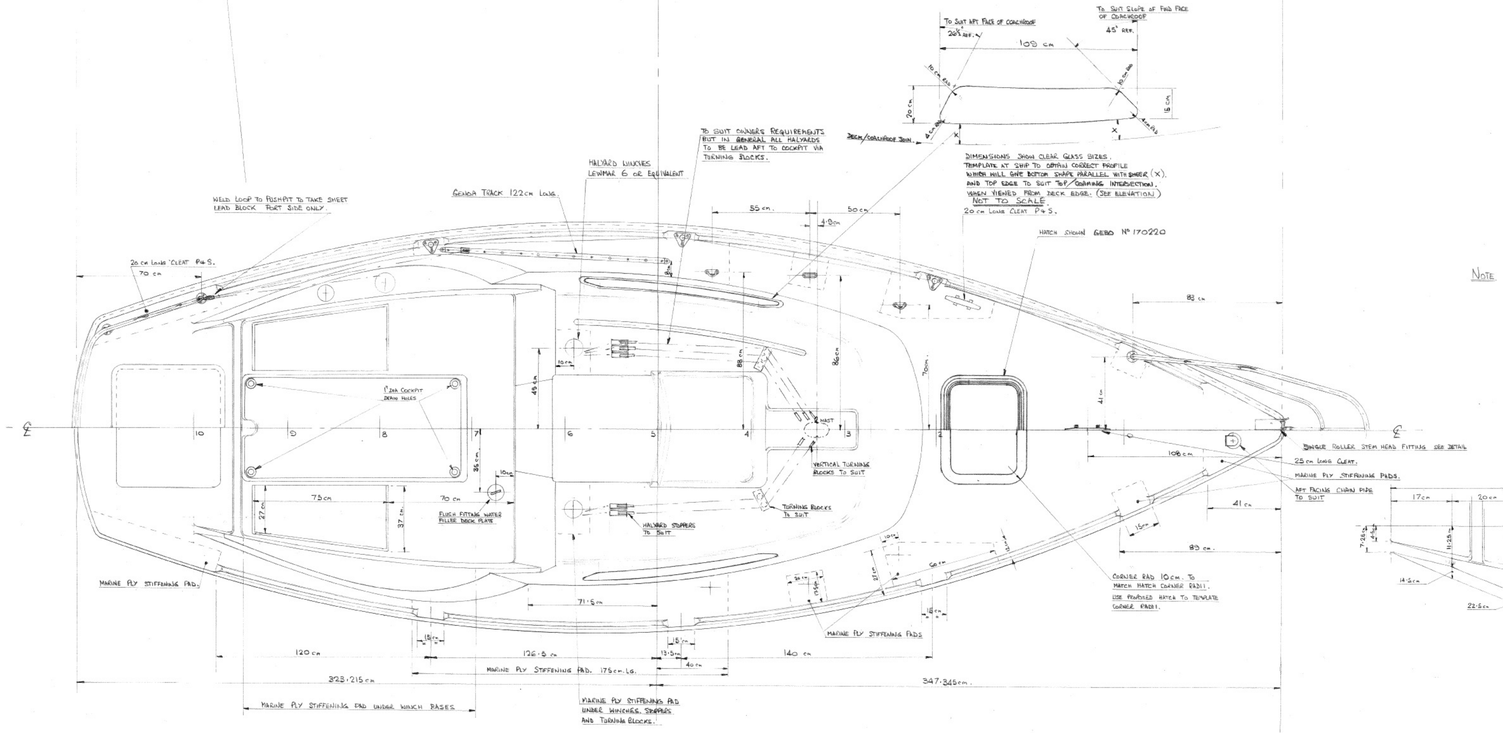

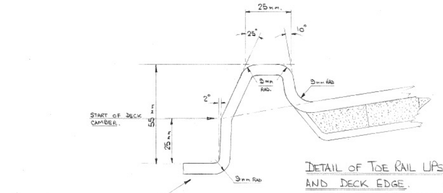

DETAIL OF TOE RAIL UPSTAND AND DECK EDGE.
SCALE FULL SIZE. DIMENSIONS IN MILLIMETRES

NOTE HULL TO DECK JOIN UP TO DANISH BOAT BUILDERS STANDARD PROCEDURE

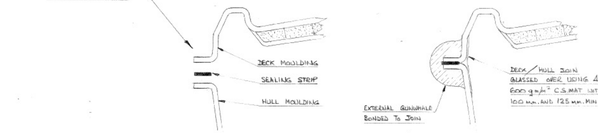

DETAIL OF HULL/DECK ASSEMBLY
SCALE ½ FULL SIZE

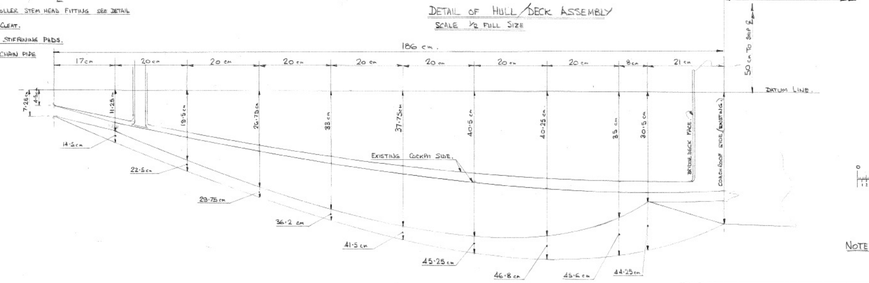

DETAIL OF WINCH SAMSON
SCALE 1/5

LAMINATION SPECIFICATION.

1 GEL COAT, SUITABLY PIGMENTED.
1 × 300 g/m² C.S. MAT.
2 × 450 g/m² C.S. MAT.
1 LAYER OF 10 mm THK. AIREX FOAM GENERALLY OVERALL EXCEPT COAMING SIDES.
2 × 450 g/m² C.S. MAT.
1 × 300 g/m² C.S. MAT.

2400 g/m² TOTAL GLASS WEIGHT. (GUNNES DOUBLED UP)

NOTE. THE AIREX SANDWICH CONSTRUCTION OF THE DECK STRUCTURE ELIMINATES ALL DECK BEAMS, BUT WHERE THROUGH BOLTED DECK FITTINGS OCCUR THE BOLTS ARE TO BE INSERTED THROUGH SUBSTANTIAL PLYWOOD PADS FITTED LOCALLY IN WAY WITH SUBSTANTIAL METAL WASHER PLATES.
SUCH PLYWOOD PADS ARE TO TAKE THE PLACE OF THE AIREX LOCALLY.
AIREX TO BE LAID ON WET MAT.

NOTE ALL DIMENSIONS ARE IN CENTIMETERS.
EXCEPT WHERE STATED.

HURLEY 700 FAMILY CRUISER | DECK PLAN.

IAN L ANDERSON M.R.I.N.A.
NAVAL ARCHITECTS
SAIL · POWER · COMMERCIAL
7 Hauley Road Dartmouth
Devon England 08043 2137

COPYRIGHT
This design is the property of Ian L. Anderson M.R.I.N.A. and must be regarded as strictly confidential; it is not to be copied, issued to a Third Party or used for production purposes without this designers permission.

SCALE: 1/10, 1/5, ½ AND FULL | DATE: 2 APRIL 81 | DRAWN: R.A. TRENDL | DRG No: H 700 — 5.